PRODUCT DATA SHEET

ChainBeam Return Sprocket Tensioner Assembly

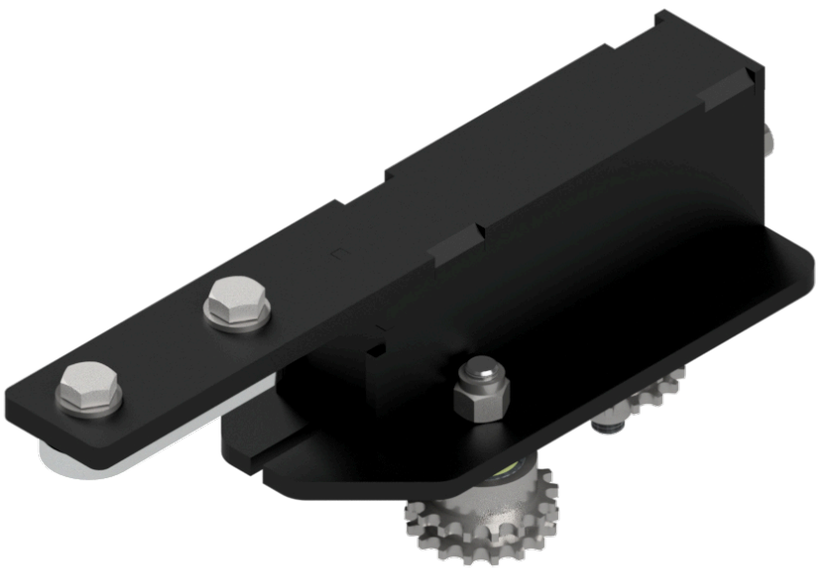

Technical Details

Part No: CBM1001

Weight: 5.00 kg
WLL: N/A

Material: Mild Steel
Finish: Black Powder Coated

The Return Sprocket Tensioner Assembly is used on our ChainBeam tracks, it is positioned at the opposite track end to the motor drive sprocket and diverts the operating chain back around the system creating a closed loop. The tension in the system can be adjusted using this assembly by moving the position of the end sprocket with in it's slotted channel.

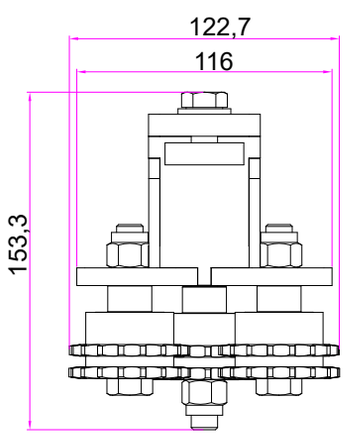

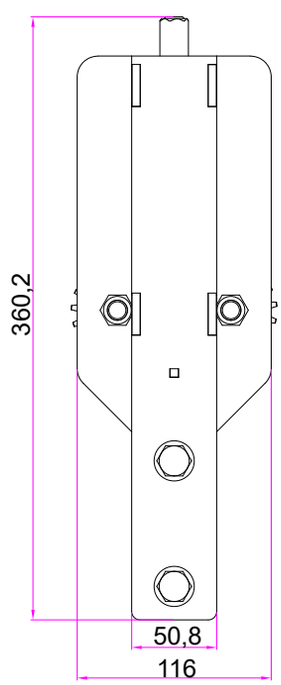

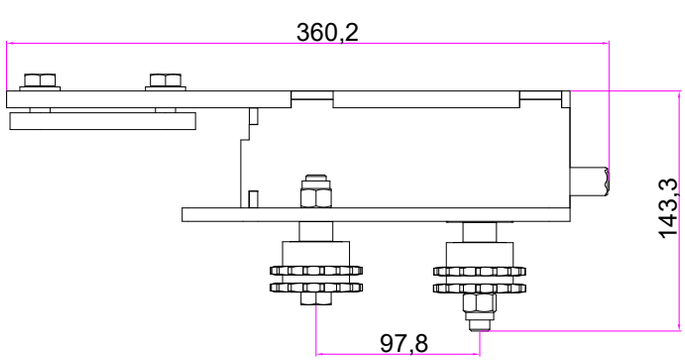

Triple E
+44 (0) 1959 570 333
www.triplee.ltd
info@triplee.ltd
@tripleeltd

Equipment Engineered for Entertainment

bsi ISO 9001 Quality Management Systems CERTIFIED