PRODUCT DATA SHEET

ChainBeam Scenery Carrier

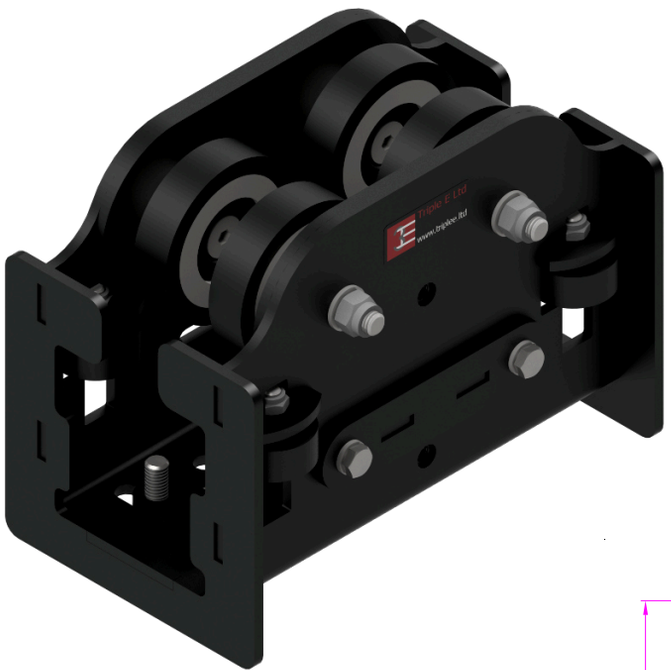

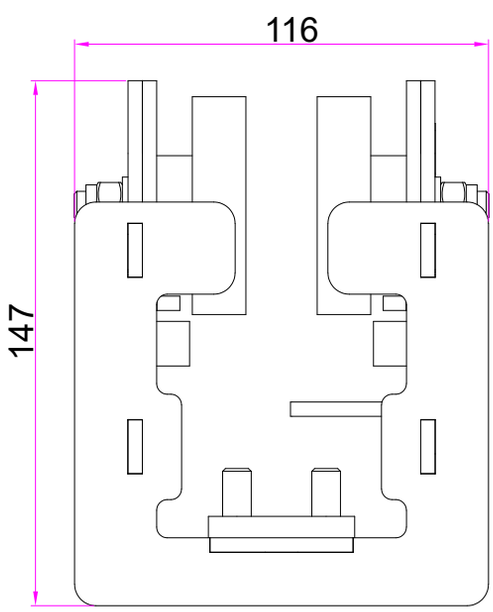

Technical Details

Part No: CBM2801

Weight: 4.051 kg
WLL: 385 kg

Material: Mild Steel & Polyurethane
Finish: Black Powder Coated (Metal work)

The CBM2801 Scenery Carrier has a robust steel 'U' shaped body with stiffening webs at each end. There are 8 ball raced unflanged wheels fitted to the carrier, the four main wheels which are polyurethane tyred, run between the top and bottom webs of the ChainBeam track and the 4 side wheels keep the carrier lined up with the track centre. The carrier is designed to carry items on both straight and curved track systems in silence. The carrier is connected to the drive chain using a CBM8001 Chain Comb.

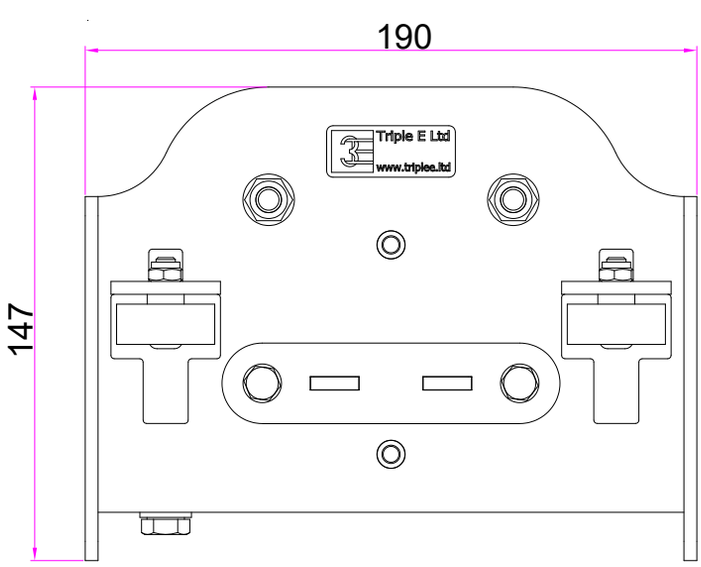

Triple E
+44 (0) 1959 570 333
www.triplee.ltd
info@triplee.ltd
@tripleeltd

Equipment Engineered for Entertainment

bsi ISO 9001 Quality Management Systems CERTIFIED