SYSTEM SPECIFICATION SHEET

ChainBeam Track System

ChainBeam is the third in a family of tracks which shares running components with UniTrack and UniBeam. ChainBeam can carry heavier loads than ChainTrack all whilst using the precise repeatable movement of chain drive.

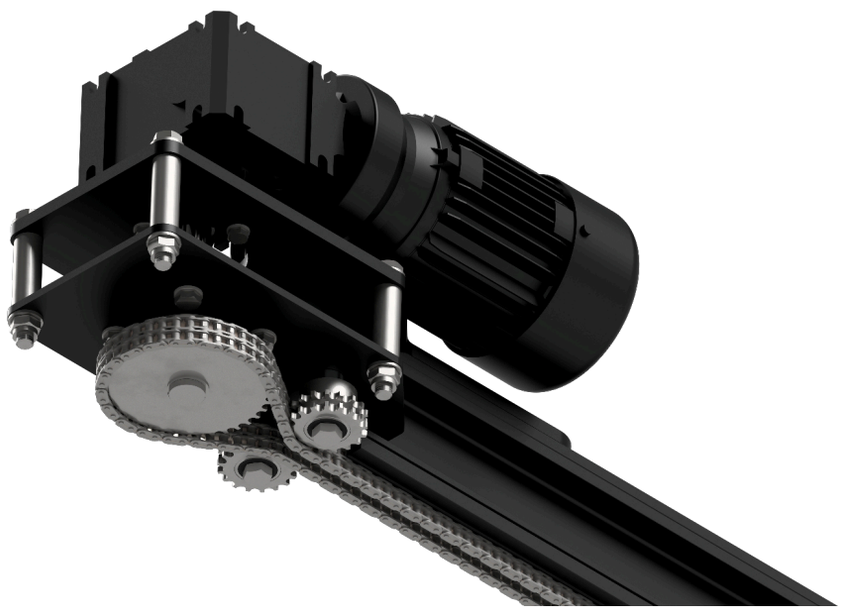

The ChainBeam master carriers are fitted with a profiled drive comb that engages with the chain allowing flexible positioning and for disengagement during commissioning and tensioning of the chain.

Large scenic items such as walls or LED screens are carried on multiple carriers which can all have drive combs, spreading the pulling force along the chain with the weight of the object taken by the track and carriers, not the chain itself.

Technical Details

External dimensions are 51 mm x 100 mm

Standard finish for all track and components is matt black, custom RAL finishes to order.

Minimum radius of 2.0 m with no additional curved track components

Available in 6100 mm (20 ft) lengths with custom cut lengths available

WLL of 25 kg per TRA0601 runner

WLL of 860 kg UDL on 1.0 m centre suspension points

Virtually maintenance free apart from periodic tensioning of the chain

Triple E
+44 (0) 1959 570 333
www.triplee.ltd
info@triplee.ltd
@tripleeltd

Equipment Engineered for Entertainment

bsi ISO 9001 Quality Management Systems CERTIFIED