PRODUCT DATA SHEET

Swivel Arm Incremental Mechanism

Technical Details

Part No: SW5001

Weight: 0.709 kg
WLL: N/A

Material: Mild Steel
Finish: Black Powder Coated

The SWA5001 is designed to rotate masking legs in order to give spaces more versatility in their curtains. Now sold separately for retrofitting to existing UBM2801 or TRA2802.

22mm diameter conduit (SWA5002) sold separately- cut to bespoke lengths up to 1.50 m for hanging curtains.

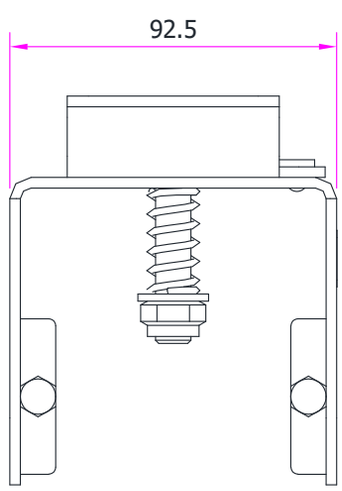

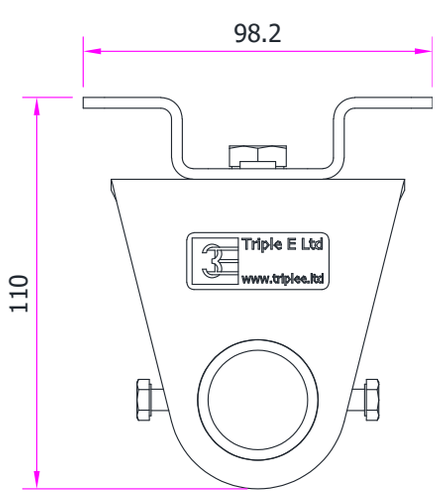

Triple E
+44 (0) 1959 570 333
www.triplee.ltd
info@triplee.ltd
@tripleeltd

Equipment Engineered for Entertainment

bsi ISO 9001 Quality Management Systems CERTIFIED