Triple E Ltd

Tel: 01959 570 333

Email: info@triplee.ltd

Web: triplee.ltd

13A Airport Industrial Estate, Wireless Road, Biggin Hill, TN16 3BW

Declaration of Conformity

UK CA

In accordance with EN ISO/IEC 17050-1:2010

1. *Product model / product:*

Product	Track systems for curtains and scenery equipped with a motor
Type	UniBeam, UniTrack, Erail, ChainTrack, ChainBeam

2. *Manufacturer:*

Name	Triple E Ltd
Address	13A Airport Industrial Estate, Wireless Road, Biggin Hill, TN16 3BW

3. *This declaration is issued under the sole responsibility of the manufacturer.*
4. *Object of the declaration:*

Product	Track systems for curtains and scenery equipped with a motor
Approximate size	Various
Power Requirements	3-phase, 380-440 V 50 Hz, 20 A

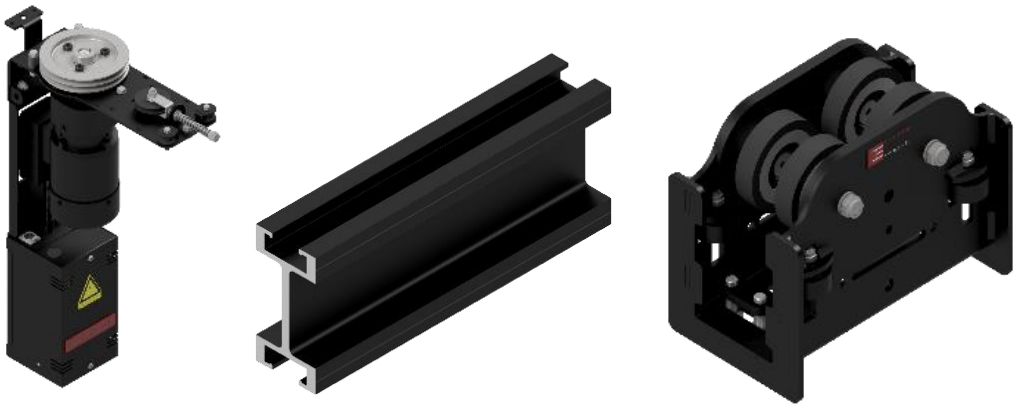

5. *The object of the declaration described above is in conformity with the relevant UK legislation:*

2008/1597	Supply of Machinery (Safety) Regulations 2008
2016/1091	Electromagnetic Compatibility Regulations 2016

Triple E Ltd

Tel: 01959 570 333

Email: info@triplee.ltd

Web: triplee.ltd

13A Airport Industrial Estate, Wireless Road, Biggin Hill, TN16 3BW

6. *References to the relevant harmonised standards used or references to the other technical specifications in relation to which conformity is declared:*

Reference	Title	Edition
BS EN 619	Safety of machinery -Continuous handling equipment and systems — Safety and EMC requirements for equipment for mechanical handling of unit loads	2002
EN 13120	Internal blinds — Performance requirements including safety	2005/A2:2016
EN 60204-1	Safety of machinery – Electrical equipment of machines – Part 1: General requirements	2018
EN IEC 61000-6-1	Generic standards - Immunity standard for residential, commercial and light-industrial environments	2016
EN IEC 61000-6-3	Electromagnetic compatibility (EMC) - Part 6-3: Generic standards - Emission standard for equipment in residential environments	2020

7. *The manufacturer carried out the conformity assessment procedure Module A – Internal control of production without involving a Notified Body.*

8. *Additional information:*

The technical documentation for the machinery is available from the authorised representative at the address above.

Signed for and on behalf of:	Triple E Ltd
Place of issue:	Biggin Hill, Kent, UK
Date of issue:	24 April 2024
Name:	Lucy Edelstein
Function:	Managing Director
Signature:	