PRODUCT DATA SHEET

Hand TracDrive - Floor Mounted

Technical Details

Part No: HDU6502

Weight: 18.440 kg
WLL: N/A

Material: Mild Steel & Nylon PA6
Finish: Black Powder Coated (metal work)

The MDU6502 is a floor mounted compact hand winch to operate corded tracks where hand pulling is not suitable. It can be retro fitted to any system. The winch is roped up in a similar way to our motors

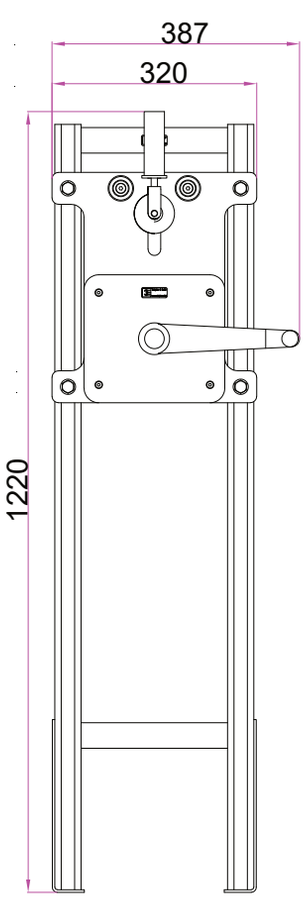

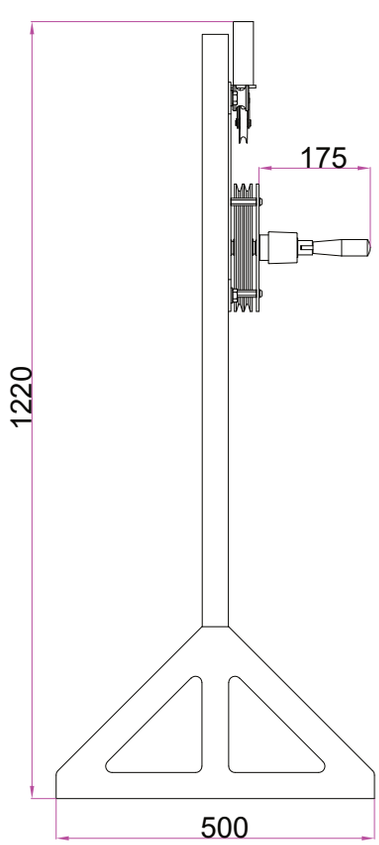

Triple E
+44 (0) 1959 570 333
www.triplee.ltd
info@triplee.ltd
@tripleeltd

Equipment Engineered for Entertainment

bsi ISO 9001 Quality Management Systems CERTIFIED