PRODUCT DATA SHEET

Hand TracDrive+ Floor Mounted

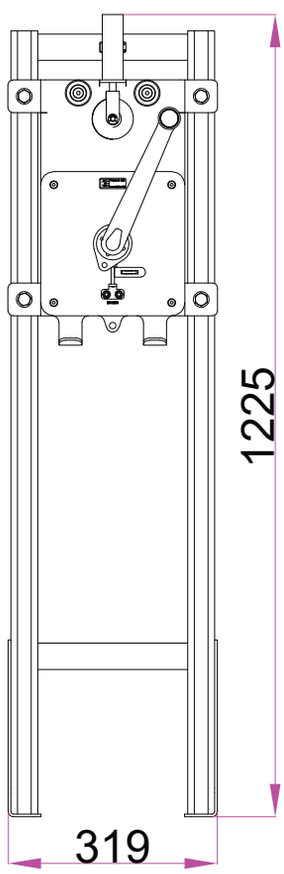

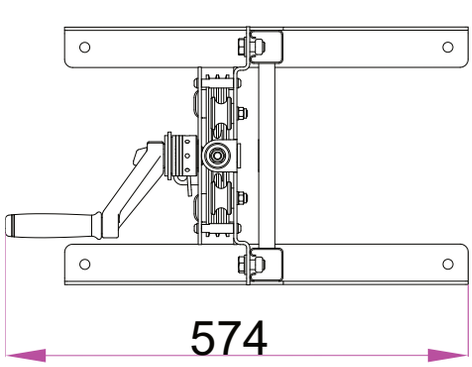

Technical Details

Part No: HDU6504

Weight: 20.00 kg
WLL: N/A

Material: Mild Steel & Nylon PA6
Finish: Black Powder Coated (metal work)

The Floor-mounted Hand TracDrive+ is a compact, upgraded hand winch designed for operating corded tracks where hand pulling isn't suitable. It uses the same V-Pulley for smooth operation and can be retrofitted to any system, with cord setup similar to our motorised units. The new design features an offset from the wall for easier installation and improved accessibility.

For added security, the Hand TracDrive+ is now lockable and comes with a removable handle that can be stored away when not in use. A small wire drift can also be added for additional protection, making it a secure, user-friendly solution for manual track operation.

Triple E
+44 (0) 1959 570 333
www.triplee.ltd
info@triplee.ltd
@tripleeltd

Equipment Engineered for Entertainment

bsi ISO 9001 Quality Management Systems CERTIFIED