PRODUCT DATA SHEET

Limit Switch for Erail for Curved Track Systems

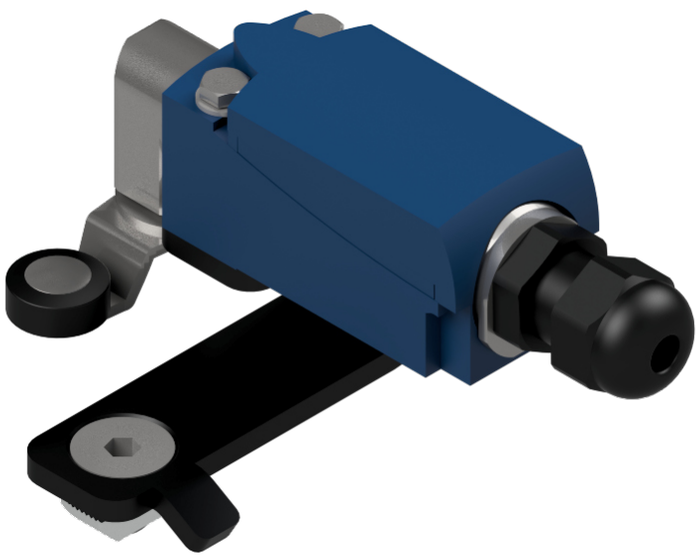

Technical Details

Part No: MDA7007

Weight: Varies
WLL: N/A

Material: Electrical Component
Finish: N/A

The MDA7007 Limit Switch is to be mounted to the top of curved Erail motorised systems. A motorised track system has to be fitted with two limit switches, one for the open and one for the close. Correct installation of the limit switches is very important as they ensure that the stopping points for the curtains/scenery are set and that the motor stops accordingly. The operating speed of the curtain/scenery and the ramp down speed of the motor must also be taken in consideration when placing the limits.