Triple E

Equipment Engineered for Entertainment

T: +44 (0) 1959 570 333

E: info@triplee.ltd

www.triplee.ltd

13A Airport Industrial Estate, Wireless Road, Biggin Hill, Kent TN16 3BW

SDRIVE - MDU6201 MOTOR DRIVE UNIT

OPERATION & MAINTENANCE MANUAL

JANUARY 2025

SDRIVE MOTOR DRIVE UNIT

WARNINGS OF USE

The contents of this manual cover aspects of use of the SDrive motor with Triple E Track Systems. If you are thinking of using it for anything non-standard or out of the ordinary please get in touch with Triple E Ltd before proceeding.

This motor is designed to be used for curtain track and must not be used to move rigid scenery unless an E-Stop circuit has been fitted.

This motor is designed for indoor use only. It has an IP rating of 30 which means it's protected against solid objects of 2.5 mm diameter or greater. It has no dust or water rating.

The SDrive motor unit is intended for curtains with a maximum weight of 150 kg on a straight track and 100 kg on a curved track.

When installing or adjusting the motor, it is advised that the power source is switched off, locked off and tagged in accordance with electrical safe isolation procedures.

Once fully installed it is necessary to double check that all fasteners are securely tightened. Routine safety inspections should be performed to check all components.

The fully assembled weight of the SDrive motor unit is 15 kg so care should be taken when moving or fitting it.

Before you start

- 13 mm Spanners
- 17 mm Spanner
- 5 mm Allen Key
- Some operations might need a second person to assist

The electrical supply requirements are dependent on the supply of the region you operate the motor in.

The SDrive is supplied in two electrical supply variations, specified at time of purchase:

230 VAC 50 Hz 10 Amps or 120 VAC 60 Hz 16 Amps

The SDrive electrical connection is via the 5 metre 3-core 1.5 mm^2 cable, one end has a Neutrik PowerCON connector, the other end is left bare for you to connect how you wish.

It is recommended that the motor unit is supplied by its own circuit and protected by a 10 A type C MCB or RCBO (16 A Type C or equivalent).

SDRIVE MOTOR DRIVE UNIT

OVERVIEW

The SDrive system is specifically aimed for use in schools, studios and small venues.
Offering the same convenience as our larger motors in regards to track mounting, the SDrive offers the perfect solution when space, weight and budget are restricted.
The SDrive is designed to be exceptionally easy to install- it only requires connecting the power cable into the mains supply either with a 3 pin plug or hard wiring (230 VAC 50 Hz), and plugging in of end-of-travel limits and control pendants. The power connection is via a Neutrik PowerCON and the control inputs are connected via the following XLR connections:

- 2 off 7 pin XLR for 3 push button wired pendants (two pendants can be used concurrently).
- 2 off 3 pin XLR for track mounted limits.

A motor reverse switch is incorporated into the control box that allows the user to quickly and easily switch the direction of travel in relation to the open and close buttons.

The SDrive motor uses a 0.37 kW 50 Hz motor and requires a 230 V, 13 A, 50 Hz single phase supply.

The SDrive is fitted with colour coded connectors. The red is for input commands and the blue and green are for limits.

All new SDrives can be fitted with an EStop box allowing for emergency control. Fitting an Estop on a motor is a safety mechanism designed to immediately shut down power to the motor to prevent injury, equipment damage, or other hazards.

SDRIVE MOTOR DRIVE UNIT IN DETAIL

The SDrive is a compact motor unit incorporating all drive and control elements in one assembly. With its compact dimensions and light weight of only 15 kg it is easy to install and, due to its plug and play design, quick to get running.

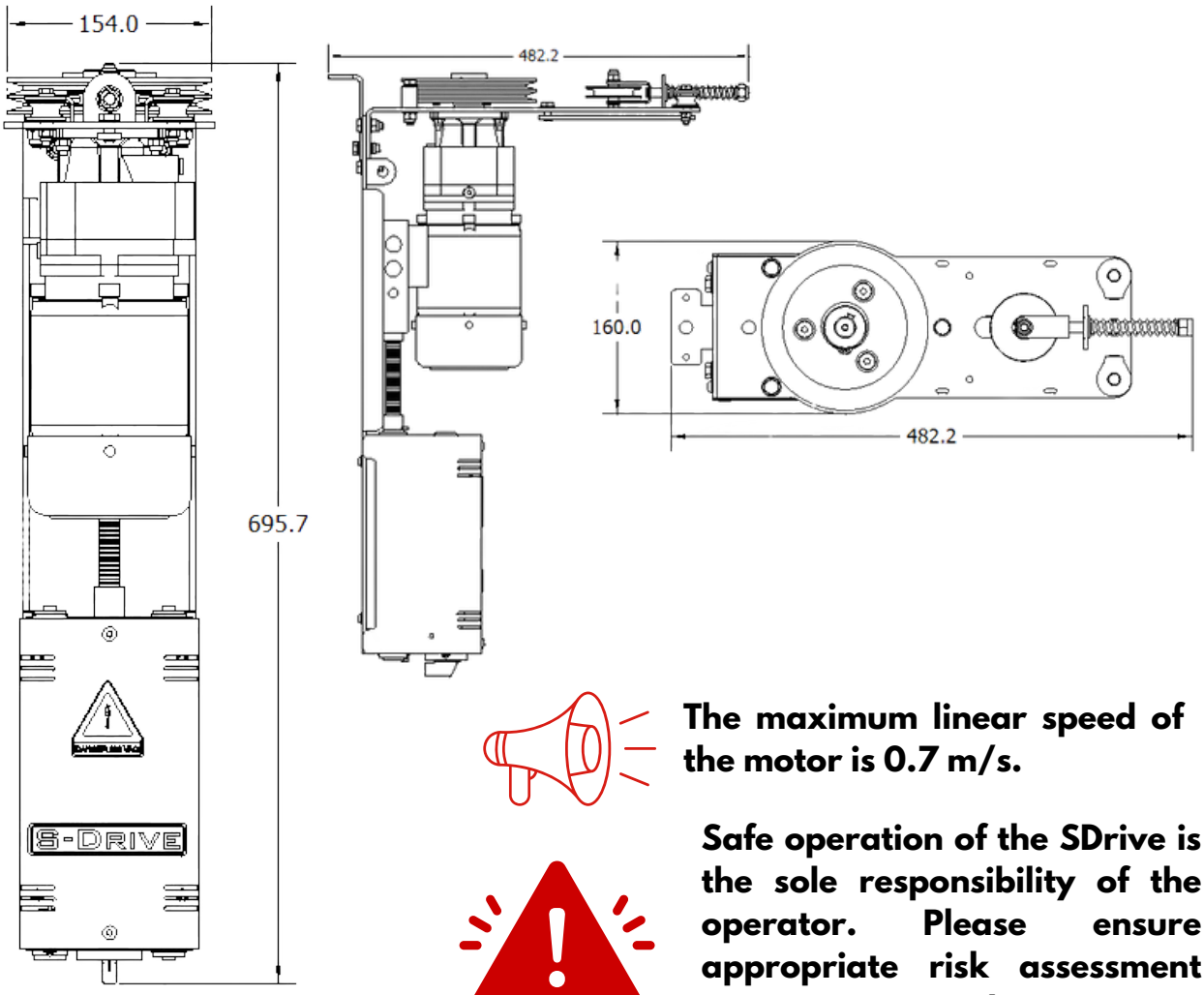

The maximum linear speed of the motor is 0.7 m/s.

Safe operation of the SDrive is the sole responsibility of the operator. Please ensure appropriate risk assessment processes are in place.

Take care to avoid injury to hands when in the vicinity of equipment with moving mechanical parts.

SDRIVE MOTOR DRIVE UNIT

CORDING DIAGRAM

Mechanical Installation

The drawing below shows the cording method for the SDrive. The rope tensioner spring must be compressed during the cording process but remain only partially compressed afterwards. This helps to compensate for any rope stretch. The SDrive is also equipped with a free spinning pulley which aids in the cording process. The pulley can be released from the motor by removing the 3 shoulder bolts. This allows the pulley to freely rotate but still remain part of the motor assembly during the cording process.

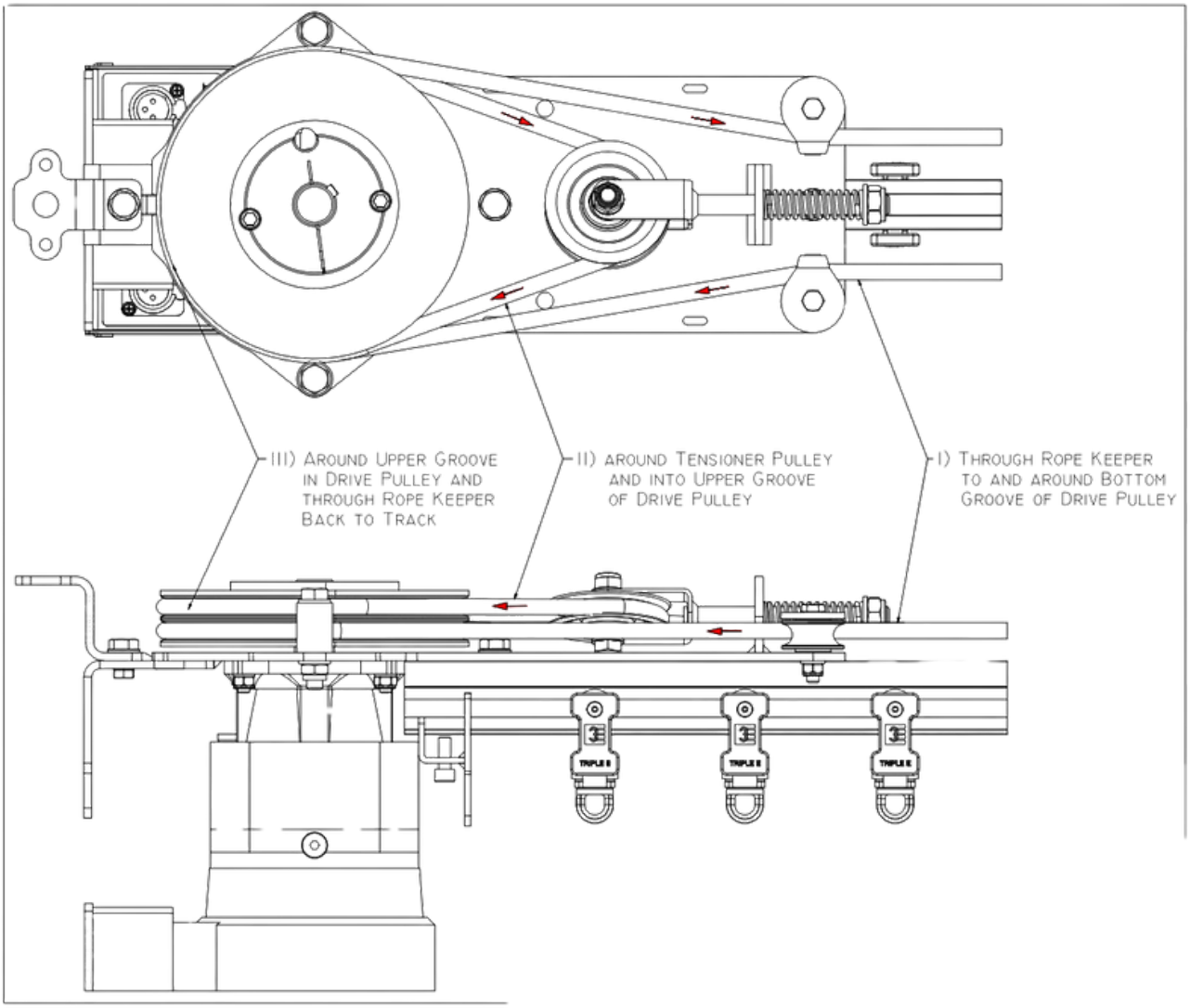

SDRIVE MOTOR DRIVE UNIT

TENSIONING

Mechanical Installation

In the case of a free spinning motor or slipping drive pulley the cord will need re-tensioning (the motor will be turning without moving the curtain).

- **Disconnect the motor power before undertaking any maintenance on the motorised curtain track.**
- **Compress the tension spring – this can easily be done by simply tightening the nut on the tensioner.**
- **Loosen off rope clamp on master runner(s) and pull slack rope through all rope clamps - repeat this step until sufficient tension in the rope is achieved.**
- **Lock off rope clamps, release tensioner spring and re-connect motor power.**

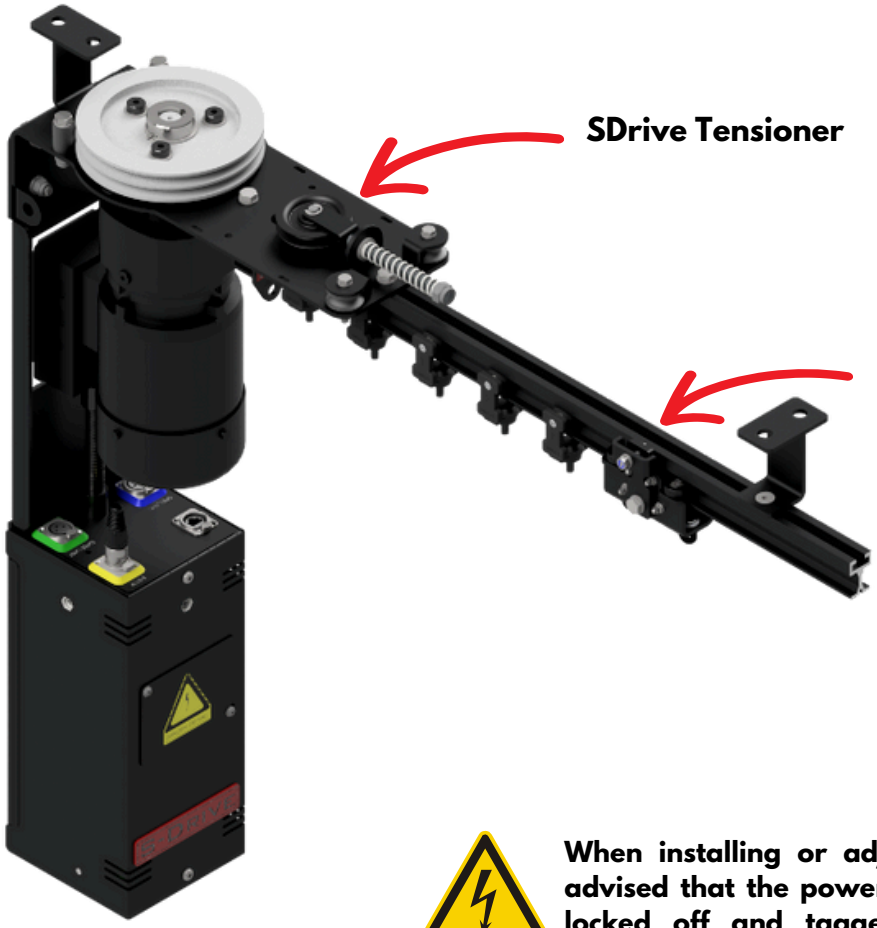

When installing or adjusting the motor, it is advised that the power source is switched off, locked off and tagged in accordance with electrical safe isolation procedures.

The fully assembled weight of the SDrive motor unit is 15 kg so care should be taken when moving or fitting it.

SDRIVE MOTOR DRIVE UNIT

LIMITS

Correctly Positioning the Track Mounted Limits

Each SDrive is supplied with two track mounted limits specific for the track system it is intended to fit, one for the open direction and one for the close direction. It is important that these limits are placed in the correct position (open is at the off-stage end).

When a limit is struck by the Limit Striker the motor unit does not stop instantaneously, there is a short period of half a second before the motor stops (ramp down). The ramp down must be considered when positioning the limits on the track and they may need to be adjusted a couple of times after you've set the speed of the curtain to get them in the right place.

It is important that the master runner reaches its final stop position without any runners hitting an obstruction such as the track end stops as this could damage the motor or gearbox.

Example:
When the speed of the motor is set to 50% of full speed the linear distance travelled in the half second ramp down is less than the distance travelled if the speed were set at 100%. Therefore, it would be prudent to ensure that the runners do not strike any obstructions prior to it coming to a full stop when the motor speed is at 100%. Initially placing the limits at least 300 mm away from any obstruction (consider where the ERL0601 runners finish stacking) should be the starting point, then once the system has been run at full speed and noting the stopping positions the limit positions can be adjusted accordingly.

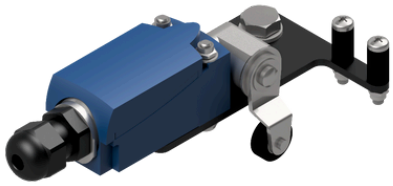

MDA7006 Limit Switch for Erail Straight Track

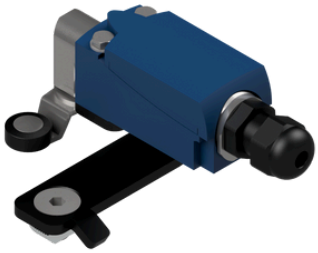

MDA7007 Limit Switch for Erail Curved Track

LIMIT CABLES

It is important to stop the limit cables from touching the Master Runner. We supply Erail limit cable clips as shown below. These should be evenly spaced at 2 per metre. The cable of the close limit has to be clipped to the track on the opposite side of the rope clamp so the cable can't get trapped between Master Runner and track. The limit cable for the open position switch can be clipped to the side of the rope clamp as the Master Runner is not traveling beyond this limit

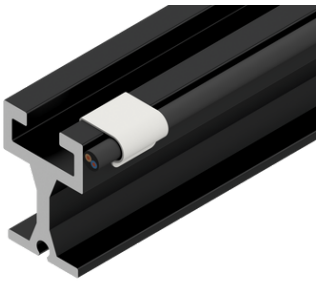

SDRIVE MOTOR DRIVE UNIT

MOTOR CONTROL

Pendant Options

The SDrive can be supplied with various pendants and up to 2 can be used at once. Options include a speed pot, key switch and wireless control. Please note, the wireless pendant can be used concurrently with any pendant and two speed pot pendants cannot be used concurrently.
The SDrive control supply circuit requires a motor rated circuit breaker on the supply so that the unit can be used with an RCD without causing nuisance tripping. The SDrive can also be supplied with a DMX Curtain Controller - to be used for curtains only.

Standard Pendant

Standard Pendant with Speed Pot

Standard Pendant with Key Switch

All accessories sold separately.

Wireless Control Box

SDrive with DMX Curtain Controller

The standard pendant must always remain connected to the motor unit.

SDRIVE MOTOR DRIVE UNIT CHECK RECORD

The SDrive unit is a maintenance free system however periodic checks should be made for loose components and damage to the cord. If the cord becomes very frayed or is otherwise damaged it should be replaced.

Date of Maintenance	Inspected By	Notes