PRODUCT DATA SHEET

UniRing

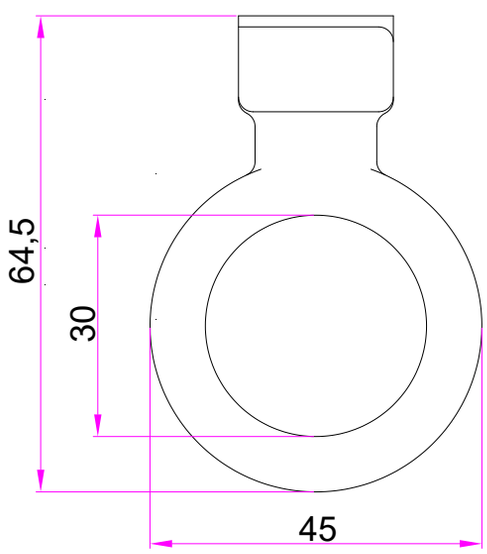

Technical Details

Part No: UBM2005

Weight: 0.025 kg
WLL:

Material: Nylon 6/6
Finish: Black

The Uniring is designed to suspend curtains and cloths from the bottom slot of the UniBeam. It is moulded as a 45 mm outer diameter, 30 mm inner diameter ring with a thickness of 15 mm. The block part of the fitting is inserted into the slot of the beam and then twisted through 90 degrees to trap it in place. The ring design allows for the component to remain fitted to the curtain or cloth and offers a quick-release facility when rigging or de-rigging of the curtains is required.

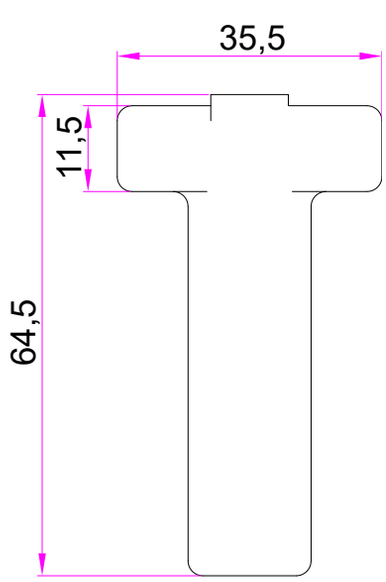

Triple E
+44 (0) 1959 570 333
www.triplee.ltd
info@triplee.ltd
@tripleeltd

Equipment Engineered for Entertainment

bsi ISO 9001 Quality Management Systems CERTIFIED