PRODUCT DATA SHEET

UniBeam Demountable Scenery Carrier



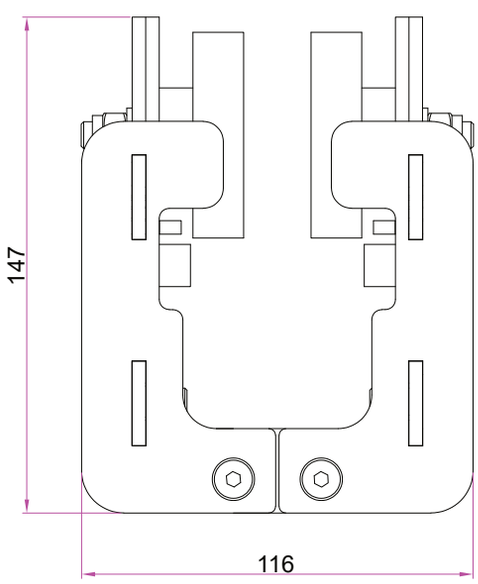

Technical Details

Part No: UBM2901

Weight: 4.2 kg
WLL: 385 kg

Material: Mild Steel & Polyurethane
Finish: Black Powder Coated (metal work)

The new UBM2901 Scenery Carrier is a fully demountable version of our industry renowned UBM2801 scenery carrier. Originally designed for silent, smooth operation on both straight and curved UniBeam track systems. Now with the added feature of being able to remove the carrier mid track! No more disassembly of the entire system needed.

Its steel body provides strength and durability for scenic use whilst its eight polyurethane-tyred wheels maintain central tracking to ensure the carrier is seamlessly aligned time after time.

For even more versatility, the UBM2901 is also compatible with our popular TRA8004 Scenery Attachment Clamp - perfect for attaching and pivoting scenic items.

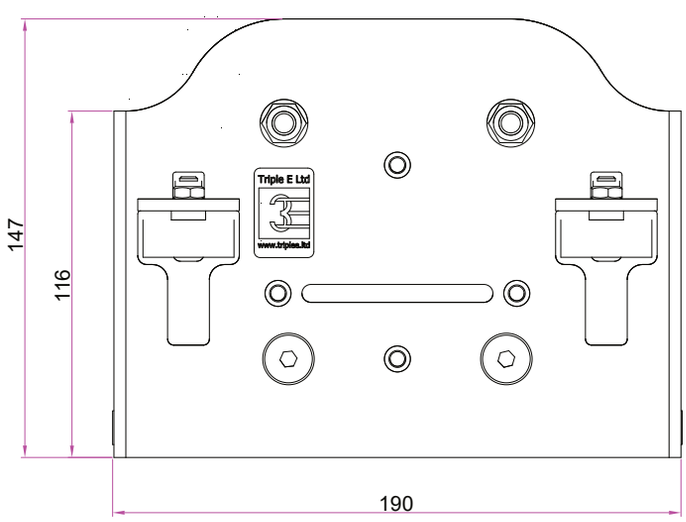

Triple E
+44 (0) 1959 570 333
www.triplee.ltd
info@triplee.ltd
@tripleeltd

Equipment Engineered for Entertainment

bsi ISO 9001 Quality Management Systems CERTIFIED